Instability Associated Baroclinic Critical Layers in Rotating Stratified Shear Flow

Chen Wang and Neil Balmforth

Department of Mathematics, University of British Columbia
chenwang@math.ubc.ca

Abstract

The notion of over-reflection has been used to rationalize the linear instability of shear flows that are directed and sheared in a horizontal plane but stratified and subject to rotation in the vertical. In the linear stability analysis of these types of flows, two types of critical levels may appear that translate to singular points in the corresponding differential eigenvalue problem. The first type corresponds to the classical kind of critical level encountered for unstratified flows whereat the phase speed of a wave matches the local flow speed. The second type are more novel, arising where the Döppler-shifted wavespeed matches the natural gravity wavespeed. Such "baroclinic" critical levels are chacterized by unusual properties of reflection and transmission; we explore how this impacts linear over-reflectional instability using a combination of WKB theory and numerical solution of the linear eigenvalue problem. In particular, we examine how Kelvin waves riding on the wall of a channel become unstably coupled to gravity waves propagating on the other side of a baroclinic critical level.

1 Introduction

Stratified shear instability plays an important role in a number of contexts from geophysics and astrophysics. The particular variety we consider here is the instability associated with a base flow that directed and sheared in the horizontal plane, but stratified and subject to rotation in the vertical direction. This type of instability has been explored by, for example, Le Dizès and Billant (2009) in cylindrical geometry and Vanneste and Yavneh (2007) for a local Cartesian tangent plane. The basic mechanism for instability is identified as due to the over-reflection of waves with different wave action (or energy, pseudo-momentum). Importantly, these works consider specific configurations for the basic flow that eliminates certain singular critical levels from the linear stability analysis; our purpose here is to reconsider how such levels can affect the stability problem.

The classical type of critical levels in unstratified shear flow are associated with the positions where the phase speed of a wave c matches the local flow speed $U(y)$, where, for a Cartesian system, the background flow is directed in x and sheared in y. In linear stability theory, these levels translate to singular points of the differential eigenvalue problem unless the vorticity gradient of the background flow vanishes there ($U''(y) = 0$). For the stratified shear flow problem considered here, the linear stability analysis develops two further potential singular points at the locations where the Döppler-shifted phase speed of the wave, $c - U(y)$, matches the natural phase speed of gravity waves, $\pm N/k$, with N the buoyancy frequency and k the streamwise wavenumber; *i.e.* $(c-U)^2 = N^2/k^2$. In Vanneste and Yavneh (2007) and Le Dizès and Billant (2009), these "baroclinic critical levels" are removed with a suitable selection of the basic state parameters. We avoid this selection here, but for simplicity remove the more traditional critical level by considering flow without a background vorticity gradient.

Despite this, critical layers are known to affect significantly wave propagation through a vertically stratified and sheared flow: Booker and Bretherton (1967) showed that, in linear theory, the classical critical level acts as a near complete absorber of waves. For vertical stratification and horizontal shear, Basovich and Tsimring (1984) found that the baroclinic critical level acts somewhat similarly, and again absorbs waves incident on the level. However, unlike in the Booker & Bretherton problem, the baroclinic critical level is also a reflection level for waves as well as a singular point. Moreover, a disturbance incident from the wave-like region is absorbed but an evanescent disturbance generated on the opposite side of the baroclinic critical level is able to tunnel through to the wave-like region and then propagate beyond without any absorption. Such directional filtering seems to be key in the numerical simulations of "zombie vortices" of Marcus et al. (2013), where small vorticies excite gravity waves that travel away from their site of generation then break at their baroclinic critical levels to generate new vortices, leading to a self-replicating cycle.

In the present study, we examine how the baroclinic critical layers can affect the linear over-reflectional instability of Vanneste and Yavneh (2007). We adjust the parameters of the basic state to reintroduce these singular points into the domain and consider their consequences; we achieve this by considering a channel flow where the location of the boundary can be suitably chosen. Given the peculiar nature of absorption and transmission at the baroclinic critical levels, we focus specifically on the situation where a boundary on one side of the flow supports a Kelvin wave, but there is a baroclinic critical level within the domain that allows gravity waves to propagate on the other side of the flow. Our main goal is to show that the resulting coupling between the Kelvin and gravity waves leads to an over-reflectional instability that is engineered by the character of wave transmission and absorption at the baroclinic critical level.

2 Model and Governing Equations

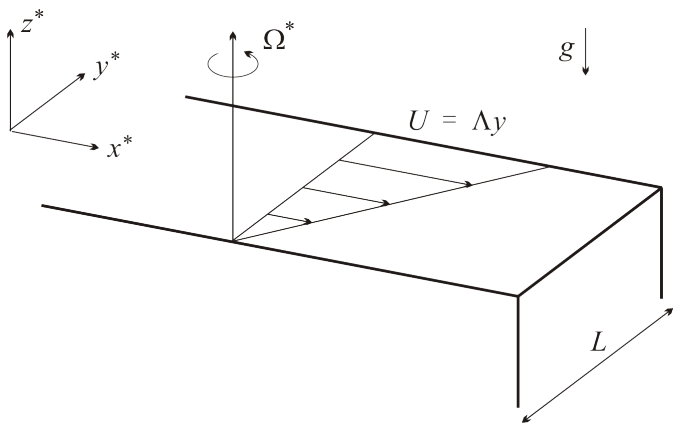

Figure 1: Sketch of the flow geometry.

The geometry of the model flow is described by the Cartesian coordinate system (x^*, y^*, z^*) sketched in Figure 1. The basic flow is a horizontal linear shear flow $(\Lambda y^*, 0, 0)$, where Λ is the shear rate. The flow is bounded by walls at $y^* = 0$ and $y^* = L$. The domain rotates around the z-axis at the rate of Ω^*, and the flow is stratified with the Brunt-Väisälä frequency N^* (the star '*' representing dimensional variables). In the following

analysis, we use dimensionless variables; the scales of velocity, time, length, density and pressure are ΛL, $1/\Lambda$, L, ρ_0, and $\rho_0\Lambda^2 L^2$, respectively, where ρ_0 is the reference density of the undisturbed flow. Thus, we set $(x, y, z) = L^{-1}(x^*, y^*, z^*)$ and so forth, with the dimensionless variables appearing without the star decoration. The dimensionless versions of the rotation rate and Brunt-Väisälä frequency are $f = 2\Omega^*/\Lambda$ and $N = N^*/\Lambda$.

In Boussinesq approximation, the linearized governing equations for the dimensionless velocity field $[u(x, y, z, t), v(x, y, z, t), w(x, y, z, t)]$, pressure $p(x, y, z, t)$, and density perturbation $\rho(x, y, z, t)$ are

$$u_t + yu_x + (1 - f)v = -p_x, \tag{1}$$

$$v_t + yv_x + fu = -p_y, \tag{2}$$

$$w_t + yw_x + \rho = -p_z, \tag{3}$$

$$\rho_t + y\rho_x - N^2 w = 0, \tag{4}$$

$$u_x + v_y + w_z = 0, \tag{5}$$

where the subscripts denote partial derivatives. The boundary conditions are that there is no flow through the walls:

$$v = 0 \quad \text{at} \quad y = 0 \quad \text{and} \quad y = 1. \tag{6}$$

We search for normal modes, expressing the perturbations in the form,

$$(u, v, w, p, \rho) = [\hat{u}(y), \hat{v}(y), \hat{w}(y), \hat{p}(y), \hat{\rho}(y)] \exp\left(\mathrm{i}kx + \mathrm{i}mz - \mathrm{i}kct\right), \tag{7}$$

where k and m are the horizontal and vertical wavenumbers and c is the horizontal phase speed. The amplitudes $\hat{u}$, $\hat{v}$, $\hat{w}$ and $\hat{\rho}$ can be expressed in terms of $\hat{p}$:

$$\hat{u} = \frac{(f-1)\hat{p}' - k^2(y-c)\hat{p}}{k^2(y-c)^2 - f(f-1)}, \quad \hat{v} = \frac{\mathrm{i}k\left[(y-c)\hat{p}' - f\hat{p}\right]}{k^2(y-c)^2 - f(f-1)}, \tag{8a, b}$$

$$\hat{w} = \frac{-mk(y-c)\hat{p}}{k^2(y-c)^2 - N^2}, \quad \hat{\rho} = \frac{\mathrm{i}mN^2\hat{p}}{k^2(y-c)^2 - N^2}. \tag{8c, d}$$

The pressure $\hat{p}$ satisfies the second-order differential equation,

$$\hat{p}'' + h\hat{p}' + l^2\hat{p} = 0 \quad \text{or} \quad \hat{p}'' + h\hat{p}' - \lambda^2\hat{p} = 0, \tag{9a, b}$$

with

$$h(y) = \frac{-2k^2(y-c)}{k^2(y-c)^2 + f(1-f)}, \tag{10}$$

$$l^2(y) = -\lambda^2(y) = -k^2\frac{k^2(y-c)^2 - f(f+1)}{k^2(y-c)^2 - f(f-1)} - m^2\frac{k^2(y-c)^2 - f(f-1)}{k^2(y-c)^2 - N^2}. \tag{11}$$

The boundary conditions on $\hat{p}$ are

$$(y-c)\hat{p}' = f\hat{p} \quad \text{at} \quad y = 0 \quad \text{and} \quad y = 1. \tag{12}$$

From (11) we see that singular points occur at the baroclinic critical level,

$$y = y_b \equiv c + \frac{N}{k}. \tag{13}$$

We consider only one such point, $0 < y_b < 1$, with the other level $y = y_b \equiv c - \frac{N}{k}$ assumed to lie outside the flow domain. For simplicity, we also exclude any other turning points where the sign of $l^2 = -\lambda^2$ changes. This situation corresponds to relatively large f but relatively small N; *i.e.* strong rotation but light stratification. Our main goal is to detect unstable modes with $\mathrm{Im}(c) > 0$.

3 Solution and Discussion

Assuming that $l^2 \gg 1$ or $\lambda^2 \gg 1$, the WKB solutions of (9a,b) are

$$p = \frac{1}{\sqrt{l}} \exp \int_{y_b}^{y} -\frac{1}{2} h(\xi) \mathrm{d}\xi \left[A \sin \int_{y_b}^{y} l(\xi) \mathrm{d}\xi + B \cos \int_{y_b}^{y} l(\xi) \mathrm{d}\xi \right] \quad \text{for} \quad y_b < y < 1, \tag{14}$$

$$p = \frac{1}{\sqrt{\lambda}} \exp \int_{y_b}^{y} -\frac{1}{2} h(\xi) \mathrm{d}\xi \left[G \exp \int_{y_b}^{y} \lambda(\xi) \mathrm{d}\xi + H \exp \int_{y_b}^{y} -\lambda(\xi) \mathrm{d}\xi \right] \quad \text{for} \quad 0 < y < y_b. \tag{15}$$

where A, B, G and H are constants to be determined by imposing the boundary conditions and the continuity of p near the critical layer. Note that the hat '$\hat{}$' has been omitted here as well as in the subsequent analysis.

The WKB solution is not accurate near $y = y_b$, and there we need a local solution instead. Rescaling the coordinate near $y = y_b$,

$$\eta = \frac{y - y_b}{\varepsilon} \quad \text{with} \quad \varepsilon = \frac{2Nk}{m^2 \left[f(f-1) - N^2 \right]}, \tag{16}$$

we find the leading-order local equation for p:

$$\frac{\mathrm{d}^2 p}{\mathrm{d}\eta^2} + \frac{1}{\eta} p = 0. \tag{17}$$

Here, ε is a small parameter, given that N is relatively small and f is relatively large.

The solution of (17) can be expressed as

$$p = C\sqrt{-\eta} I_1(2\sqrt{-\eta}) + D\sqrt{-\eta} K_1(2\sqrt{-\eta}) \quad \text{for} \quad \mathrm{Re}(\eta) < 0, \tag{18}$$

where I_1 and K_1 are the first-order modified Bessel function of the first and second kind. Note that since we consider instability, c is complex with a very small, positive imaginary part. Hence η is complex and the complex function $f(z) = \sqrt{z}$ has two branches. In this paper, we select the branch cuts on the complex plane such that

$$\sqrt{z} = \sqrt{|z|} \exp\left(\mathrm{i} \arg \frac{z}{2} \right), \quad \arg z \in (\pi, \pi). \tag{19}$$

In this way, $\sqrt{-\eta}$ is a positive real number for $\mathrm{Re}(\eta) < 0$. Thus in (18), I_1 and K_1 represent the exponentially growing and decaying solutions, respectively.

For $\mathrm{Re}(\eta) > 0$, and given our assumptions,

$$\mathrm{Im}(c) > 0, \quad \mathrm{Im}(\eta) < 0, \tag{20}$$

our choice of branch cuts implies

$$\sqrt{-\eta} = \mathrm{i}\sqrt{\eta}. \tag{21}$$

Substitution into (18) and using the connection formulae of Bessel functions, we find the solution for $\mathrm{Re}(\eta) > 0$:

$$p = -C\sqrt{\eta} J_1(2\sqrt{\eta}) - \frac{\mathrm{i}\pi}{2} D\sqrt{\eta} H_1^{(2)}(2\sqrt{\eta}) \quad \text{for} \quad \mathrm{Re}(\eta) > 0, \tag{22}$$

where J_1 is the first-order Bessel function of the first kind, and $H_1^{(2)}$ is the first-order Hankel function of the second kind. Equations (18) and (22) reveal the important connection between propagating waves to the right of the baroclinic critical level and the evanescent disturbances to its left: the disturbance that grows exponentially on approaching the critical level ($D\sqrt{-\eta}K_1(2\sqrt{-\eta})$) corresponds to a travelling wave ($-\frac{1}{2}\mathrm{i}\pi D\sqrt{\eta}H_1^{(2)}(2\sqrt{\eta})$) to the other side, $y > y_b$. By contrast, the evanescent solution that decays on approaching the critical level ($C\sqrt{-\eta}I_1(2\sqrt{-\eta})$) corresponds to a standing wave in $y > y_b$ ($-C\sqrt{\eta}J_1(2\sqrt{\eta})$). The former implies that continuously generated travelling waves incident on the baorclinic critical level from the right are absorbed without any reflection, much as in the Booker & Bretherton problem. On the other hand, the latter suggests that a disturbance that is continually generated at the left-hand boundary of the channel (at $y = 0$) must tunnel through to the propagation zone to the right of $y = y_b$ to generate waves travelling in either direction with equal amplitudes.

Matching (14) in the limit of $y \to y_b^+$ to (22) in the limit of $\eta \to +\infty$, and then matching (15) in the limit of $y \to y_b^-$ to (18) in the limit of $\eta \to -\infty$, provides the connection formula,

$$\frac{G}{H} = \frac{\left(\frac{B}{A}\right)^2 - 1 + \mathrm{i}\left(1 + \frac{B}{A}\right)^2}{1 + \left(\frac{B}{A}\right)^2}. \tag{23}$$

Substitution of (14) and (15) into the boundary conditions in (12) also provides the relations,

$$c\left(\frac{1}{2\lambda}\frac{\mathrm{d}\lambda}{\mathrm{d}y} + \lambda + \frac{1}{2}h\right)_{y=0} - f = \left[c\left(-\frac{1}{2\lambda}\frac{\mathrm{d}\lambda}{\mathrm{d}y} + \lambda - \frac{1}{2}h\right)_{y=0} + f\right]\frac{G}{H}\exp -2\int_0^{y_b}\lambda(\xi)\mathrm{d}\xi, \tag{24}$$

$$\frac{B}{A} = \frac{-f\tan\int_{y_b}^1 l(\xi)\mathrm{d}\xi + (1-c)\left[-\frac{1}{2}\left(\frac{1}{l}\frac{\mathrm{d}l}{\mathrm{d}y} + h\right)\tan\int_{y_b}^1 l(\xi)\mathrm{d}\xi + l\right]_{y=1}}{f + (1-c)\left[\frac{1}{2}\left(\frac{1}{l}\frac{\mathrm{d}l}{\mathrm{d}y} + h\right) + l\tan\int_{y_b}^1 l(\xi)\mathrm{d}\xi\right]_{y=1}}. \tag{25}$$

Equations (23), (24) and (25) combine into the dispersion relation for the phase speed c. The solution can be further simplified by noticing that the term on the right side of (24) is exponentially small: to leading order, we then find $c \approx c_0$ with

$$c_0\left(\frac{1}{2\lambda}\frac{\mathrm{d}\lambda}{\mathrm{d}y} + \lambda + \frac{1}{2}h\right)_{y=0,\ c=c_0} = f. \tag{26}$$

This leading-order phase speed corresponds to a Kelvin wave riding on the left-hand wall of the channel. Because c_0 is real, no instability is yet evidenced. To obtain instability, one needs to take into account the effect of the exponentially small terms on the right hand side of (24). Evaluating these terms using the approximation $c \approx c_0$ leads to

$$\begin{aligned} & c\left(\frac{1}{2\lambda}\frac{\mathrm{d}\lambda}{\mathrm{d}y} + \lambda + \frac{1}{2}h\right)_{y=0} - f \\ = & \left[c_0\left(-\frac{1}{2\lambda}\frac{\mathrm{d}\lambda}{\mathrm{d}y} + \lambda - \frac{1}{2}h\right)_{y=0,\ c=c_0} + f\right]\left(\frac{G}{H}\right)_{c=c_0}\exp -2\int_0^{y_b}\lambda(\xi)_{c=c_0}\mathrm{d}\xi, \end{aligned} \tag{27}$$

from which one can extract the phase speed including the corrections, which leads to an exponentially small growth rate.

The asymptotic solution presented above can be verified by a numerical simulation to (9), utilizing a shooting iteration method: at $y = 1$, an initial guess for c given by the asymptotic solution is used to determine p' for a prescribed p according to the boundary condition (12). These are used as initial values to integrate equation (9) leftward. At the left boundary $y = 0$, the error in the boundary condition (12) provides a discriminant that can be used to revise c, and the process repeated in the usual manner of Newton iteration until the error of boundary condition (12) at $y = 0$ is sufficiently small. An example of the results is given in Figure 2; the WKB and numerical solutions agree well with one another.

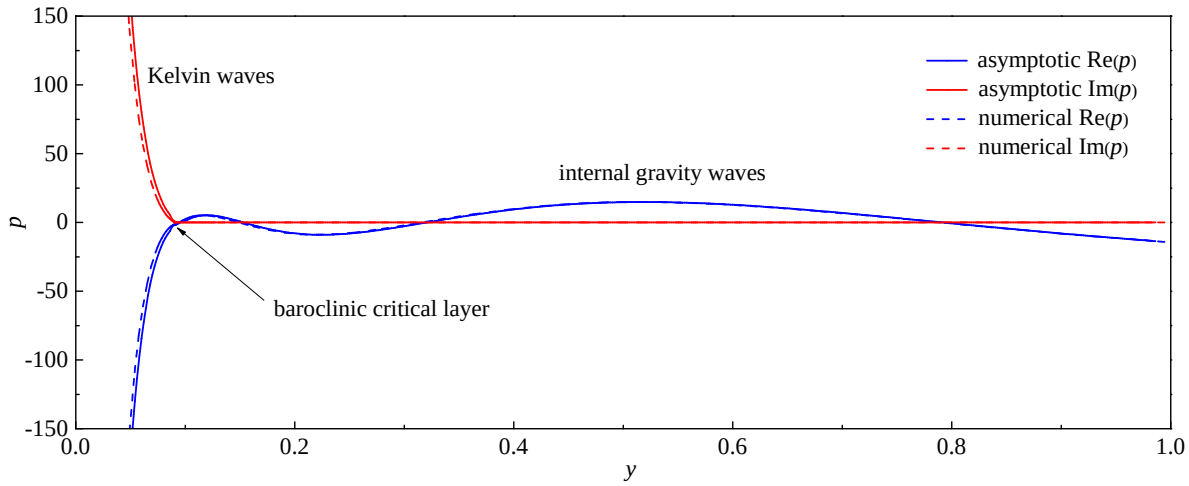

Figure 2: Sample numerical and WKB solutions for $N = 0.05$, f=3.8, $m = 1$ and $k = 1$. The phase speed c obtained from the asymptotic analysis is $4.28 \times 10^{-2} + 2.52 \times 10^{-9}\mathrm{i}$, whereas that obtained from the numerical computation is $4.03 \times 10^{-2} + 2.71 \times 10^{-9}\mathrm{i}$.

To provide a physical interpretation of the preceding result, we first note that, without the left-hand boundary at $y = 0$, the exponential decay of p to the left of $y = y_b$ demands that the local solution near the critical level must be $D\sqrt{-\eta}K_1(2\sqrt{-\eta})$ alone. But the left-travelling wave that this corresponds to for $y > y_b$ cannot form a normal mode. Thus, the region $y_b < y < 1$ in which internal gravity wave may propagate cannot support normal modes by itself, owing to the character of transmission and absorption at the baroclinic critical level.

On the other hand, the presence of the left-hand wall permits the existence of a exponentially localized Kelvin wave riding on that boundary. This disturbance can tunnel through to the propagation zone beyond $y = y_b$ to couple to travelling gravity waves. As discussed by Vanneste and Yavneh (2007), the existence of a classical critical layer between $y = 0$ and $y = y_b$ implies that the Kelvin wave and the internal gravity waves have opposite signs of wave action or energy. Thus, the coupling is expected to lead to instability.

A crucial difference of the current instability mechanism with that arising in the problem considered by Vanneste and Yavneh (2007) concerns the conditions under which one expects unstable modes to appear: for Vanneste and Yavneh (2007), the left-hand border of the the gravity-wave region is a regular turning point (reflection level). The Kelvin wave riding on the left wall can only then couple with the gravity waves when those modes almost satisfy a resonance (quantization) condition of their own. For the current problem,

however, the absorption of the left travelling wave at the baroclinic critical layer effectively removes the need to satisfy any resonance condition over the gravity wave region. The situation is more like the problem considered by Le Dizès and Billant (2009), in which gravity waves are free to radiate away from the turning point and constitute a continual loss of the opposite sign of wave action.

References

Basovich, A. Y. and Tsimring, L. S. (1984). Internal waves in a horizontally inhomogeneous flow. *J. Fluid Mech.*, 142:233–249.

Booker, J. R. and Bretherton, F. P. (1967). The critical layer for internal gravity waves in a shear flow. *J. Fluid Mech.*, 27:513–539.

Le Dizès, S. and Billant, P. (2009). Radiative instability in stratified vortices. *Phys. Fluids.*, 21:096602.

Marcus, P. S., Pei, S., Jiang, C. H., and Hassanzadeh, P. (2013). Three-dimensional vortices generated by self-replication in stably stratified rotating shear flows. *Phys. Rev. Lett.*, 111:084501.

Vanneste, J. and Yavneh, I. (2007). Unbalanced instabilities of rapidly rotating stratified shear flows. *J. Fluid Mech.*, 584:573–596.